MANWEIR LLC
RANGE OF SERVICES

Advance Machine Centre

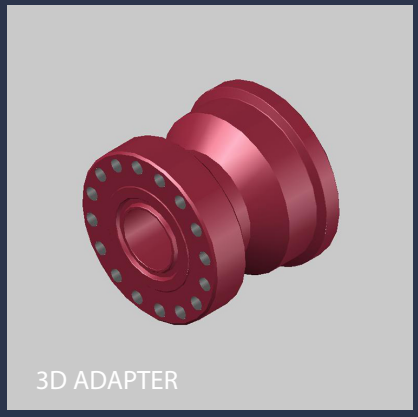
3D ADAPTER

3D STUDDED TEE

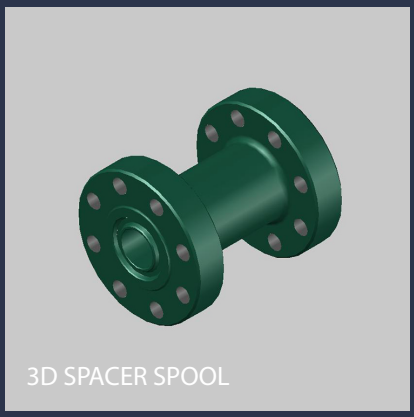
3D SPACER SPOOL

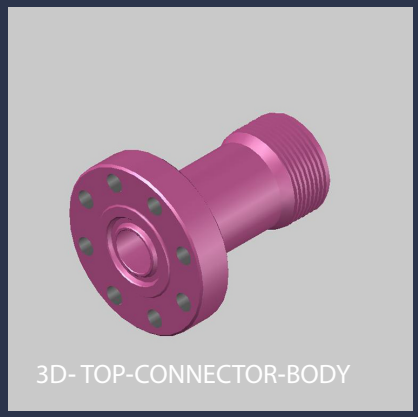
3D- TOP-CONNECTOR-BODY

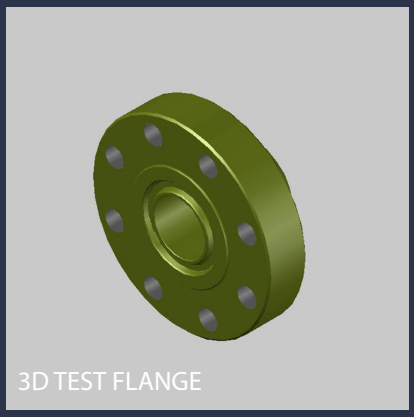
3D TEST FLANGE

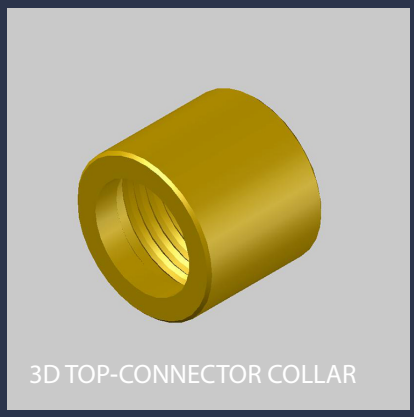
3D TOP-CONNECTOR COLLAR

3D DRILLING SPOOL

www.manweir.com

3D DRILL STEM-SUB

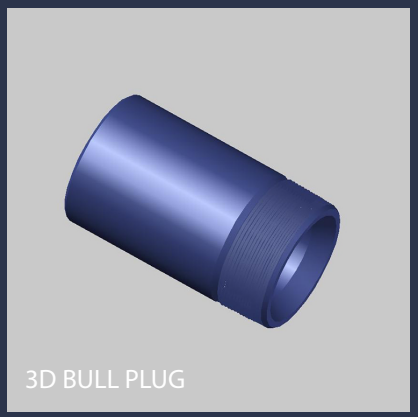
3D BULL PLUG

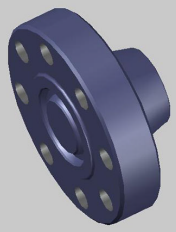

3D BLIND FLANGE

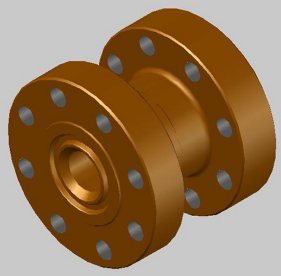

3D CROSSOVER-CONNECTOR

Advance Machine Centre

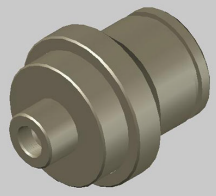

3D TOP-CONNECTOR BLANKING-PLUG

MANWEIR LLC
P.O Box 4038, CB-50,
Phase-1, Ras Laffan
Support Services Area,
RLIC, Qatar

TeleFax: (+974) 4407 6498
Hotline: +974 55500268
Tel: (+974) 4407 6000
Tel (Ras Laffan): +974 4407 600

RFQmanweir@mannai.com.qa

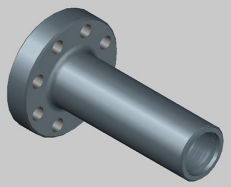

3D THREADED CONNECTOR

Advance Machine Centre

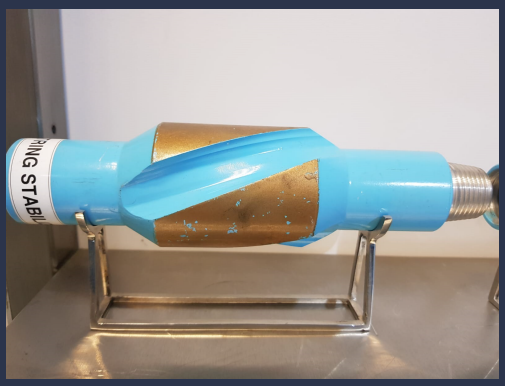

www.manweir.com

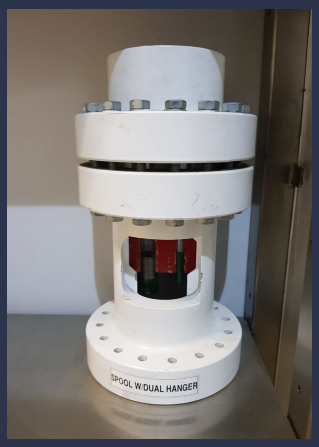

MANWEIR LLC
RANGE OF SERVICES